Disc Benders - Bimorphs

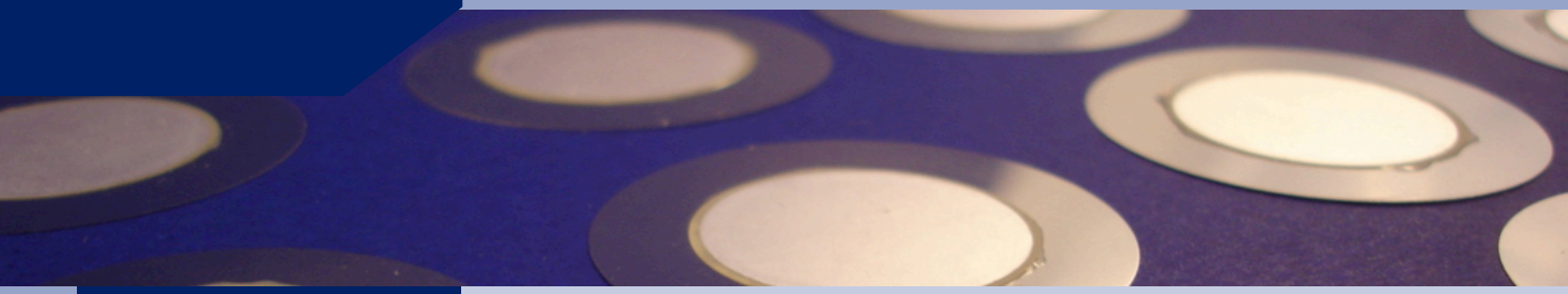

#20-2260

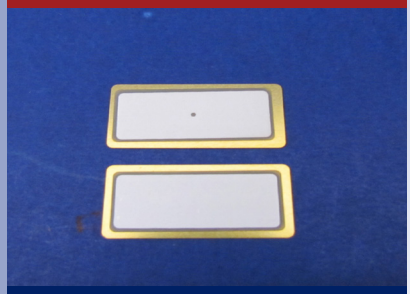

25.0mm x 12.0mm brass
8.7 kHz bimorph

FEATURES

- Clear Sound
- High Sound Pressure
- Low Power Consumption
- Two PZT Layers

APPLICATIONS

- Household Appliance Alarms
- Watch Alarms
- Smoke Detectors
- Keyboards/Push-button Devices

TECHNICAL SPECIFICATIONS

Max Drive Voltage	30 Volt P/P
Resonant Frequency #1	1.5 ±1.0kHz
Resonant Frequency #2	8.7 ±1.0kHz
Capacitance (pF at 1kHz)	96,000 pF ±30%
Ohms @ Resonant Frequency	<1,000
Overall Length	25.0mm ±0.30mm
Overall Width	12.0mm
Overall Thickness	0.34mm ±0.1mm
Crystal Length	23.00mm
Crystal Width	10.00mm
Brass Thickness	0.10mm
PZT Material	Tape Cast

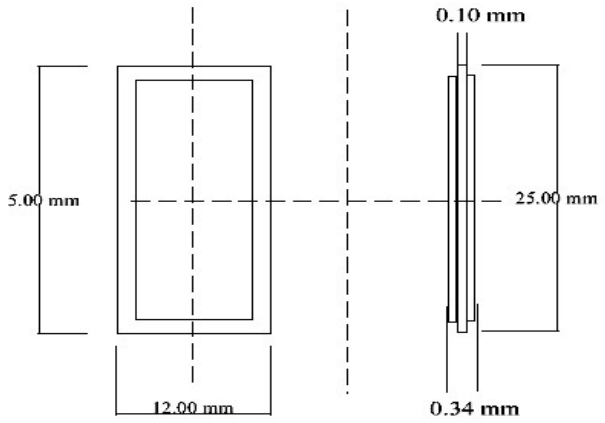

Rev. 8/22/14